Detroit Speed, Inc.
LS Engine Mount Kit w/C6 Oil Pan
DSE Hydroformed Subframe
P/N: 060404

The Detroit Speed, Inc. LS Engine Mount Kit will provide you with an ideal mounting solution for the LSx conversion into the DSE Hydroformed Subframe. The kit will allow the use of a factory C6 oil pan when installing the engine. The engine mount kit locates the engine approximately 1 1/2" rearward in the vehicle.

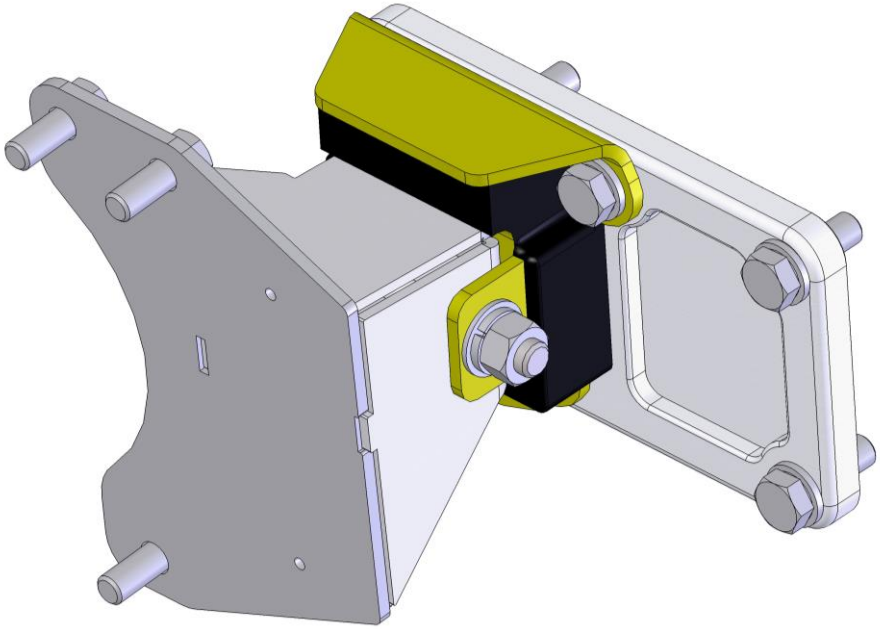

Item #	Description	Quantity
1	Engine Mount Adapter Plate, LH & RH	2
2	Frame Stand, LH & RH	2
3	Polyurethane Engine Mounts	2
4	M10 x 1.5 x 30 Countersunk Bolt	2
5	M10 x 1.5 x 30 Flange Head Bolt	4
6	M10 x 1.5 x 20 Flange Head Bolt	4
7	M10 x 1.5 x 40 Flange Head Bolt	2
8	7/16"-14 x 3.75" Hex Head Bolt	2
9	7/16"-14 Hex Nut	2
10	7/16" Flat Washer	4
11	7/16" Lock Washer	2
12	3/8"-16 x 1.0" Hex Head Bolt	6
13	3/8" Flat Washer	6

Fastener Torque Specifications	
Application	**Torque (ft/lbs)**
Adapter Plate to Engine Block (Aluminum Block)	25
Adapter Plate to Engine Block (Cast Iron Block)	35
Engine Mount to Adapter Plate (Upper Bolts)	25
Engine Mount to Adapter Plate (Lower Bolt – Aluminum Block)	25
Engine Mount to Adapter Plate (Lower Bolt – Cast Iron Block)	35
Frame Stand to DSE Hydroformed Subframe	35
Frame Stand to Engine Mount	30

1. To begin installation, locate the engine mount adapter plates in the kit. The milled side of the mount will face away from the engine with the smooth side going to the block. The end of the adapter plate with the angle cut will go to the front of the vehicle.

2. To mount the engine mount adapter plate to the engine, use two M10x1.5x30 flange head bolts (#5) and one M10x1.5x30 countersunk bolt (#4) per side. Use anti-seize on these bolts. On aluminum engine blocks, torque the bolts to 25 ft/lbs and on cast iron blocks, torque to 35 ft/lbs.

3. The engine mount will install next. Use two M10x1.5x20 flange head (#6) bolts in the top of the mount and one M10x1.5x40 flange head bolt (#7) in the bottom of the mount. Torque the upper bolts into the adapter plate to 25 ft/lbs. For the lower bolt, torque to 25 ft/lbs. on an aluminum block and 35 ft/lbs. on a cast iron block. Again, use anti-seize on these bolts.

4. Attach the frame stands to the subframe using three 3/8"-16x1.0" hex head bolts (#12) and three 3/8" flat washers (#13) per side. There is a LH and RH stand. Follow the pictures in Figures 1 & 2 for proper orientation. Use High Strength Loctite (p/n: 262) on these bolts when installing and torque the bolts to 35 ft/lbs.

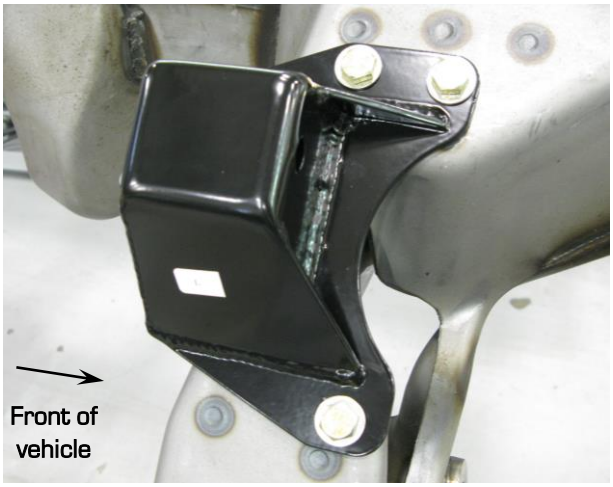

Figure 1 – LH Frame Stand

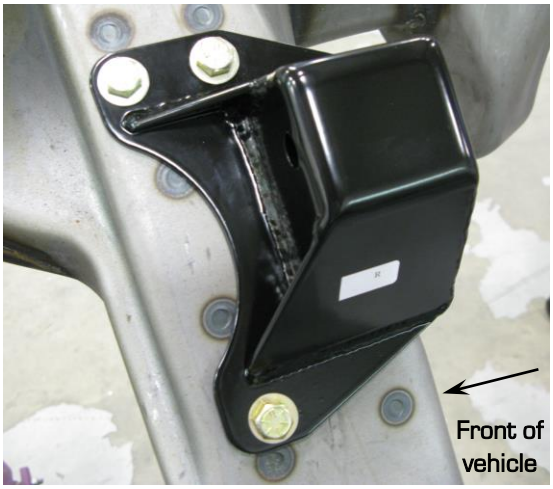

Figure 2 – RH Frame Stand

5. Once everything is positioned correctly on the frame and engine, attach the engine to the frame using two 7/16"-14x3.75" hex head bolts (#8). Use the provided flat washers (#10), lock washer (#11) and the hex nut (#9) to tighten everything in place. Torque these bolts to 30 ft/lbs.

To complete your project and the installation of the engine, Detroit Speed, Inc. has a header package available for this application. The headers are available as p/n: 061001. A picture of the headers can be seen below in Figure 3.

Figure 3 – DSE Headers

If you have any questions before or during the installation of this product please contact Detroit Speed Inc. at info@detroitspeed.com or 704.662.3272

Legal Disclaimer: *Detroit Speed, Inc. is not liable for personal, property, legal, or financial damages from the use or misuse of any product we sell. The purchaser is solely responsible for the safety and performance of these products. No warranty is expressed or implied.*